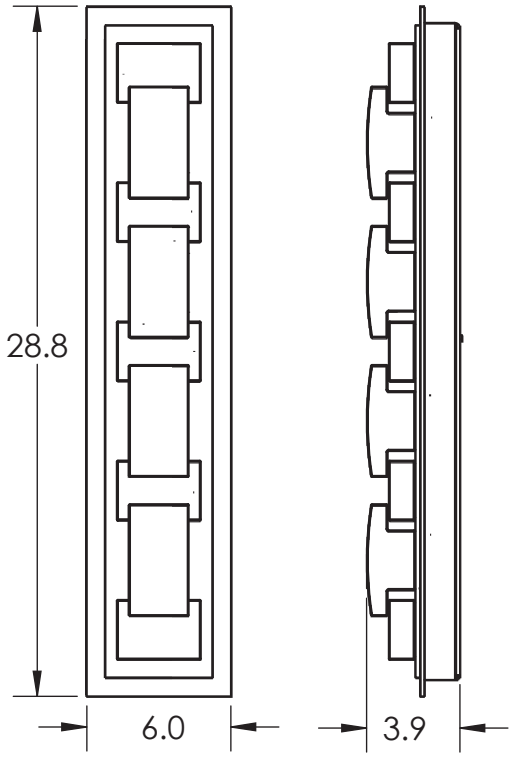

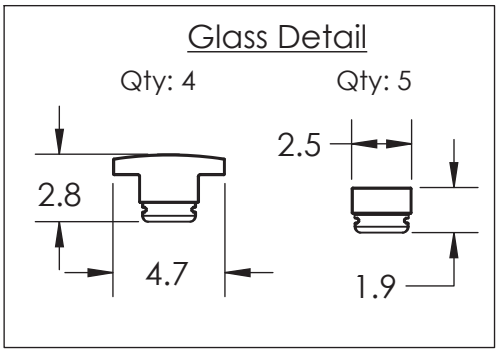

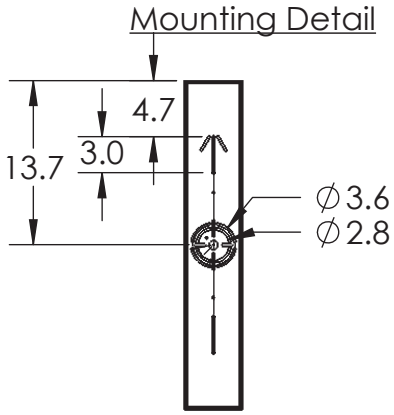

PRODUCT DESCRIPTION

The 2,500-year old art of glass mosaic tiling is brilliantly brought to light in the Tessera 28in Sconce. Tessera lighting features a choice of two tile motifs in artisan cast crystal glass and is illuminated with 93+ CRI integrated LED. ADA compliant.

PRODUCT SPECIFICATION

Construction: Aluminum Body with Clear Cast Glass

Finish Options: BS MB FB GB CS GP BB NB SN GM RB HB

Glass Options: Clear Cast Glass

Suspension Method: Mounts to J-Box

Weight(lbs.): 21

UL Rating: Indoor/Dry

Top Diffuser: Clear Cast Glass

Bottom Diffuser: Clear Cast Glass

Light Source: LED

Electrical Qty: 4

Wattage (Watts): 64

Voltage (Volts): 120

Source Lumens: 6400

Dimming: Forward/Reverse Phase to 1%

CCT: 3000K

Driver Quantity & Location: N/A

CRI: 93+

Power Factor: >0.9

SCAN FOR MORE INFORMATION

GENERAL NOTES:
All dimensions are shown in inches unless otherwise stated.
Visit studio.hammerton.com to read about our Lifetime Limited Warranty.
This product may use mixed materials like steel and aluminum in its construction. Transparent finishes may vary between steel and aluminum.
All Hammerton fixtures are handcrafted by artisans. Subtle imperfections reflect the mark of the artisan and should be expected in any handcrafted product. Dimensions may vary up to 7/8".

© Copyright 2024. All rights in design, detail or invention of this drawing are reserved as the property of Hammerton. Any imitation or adaptation without written consent is strictly prohibited.
Hammerton Inc. 217 Wright Brothers Dr. Salt Lake City, UT 84116 (801)973-8095 | studio.hammerton.com | info@hammerton.com