HAMMERTONSTUDIO™

SPECIFICATION DRAWING

Collection: TEMPEST

Product #: CHB0013-72-0

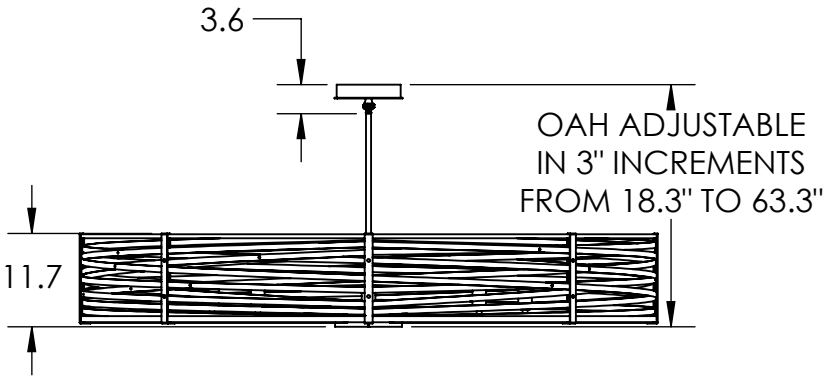

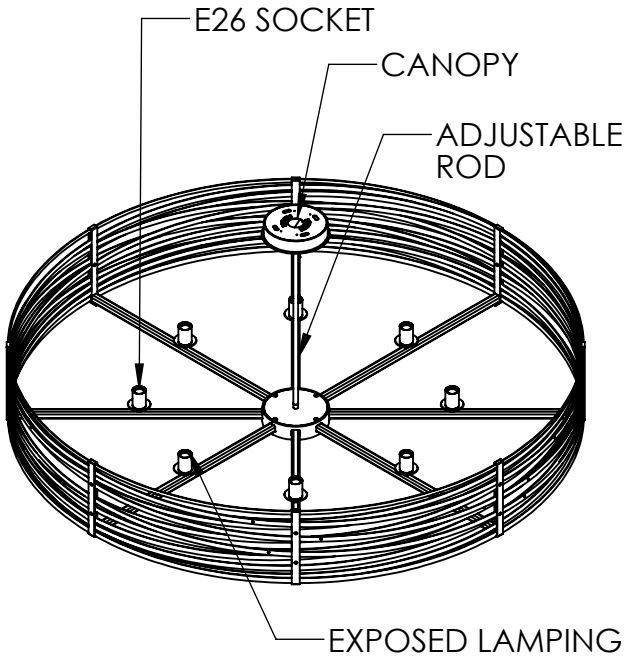

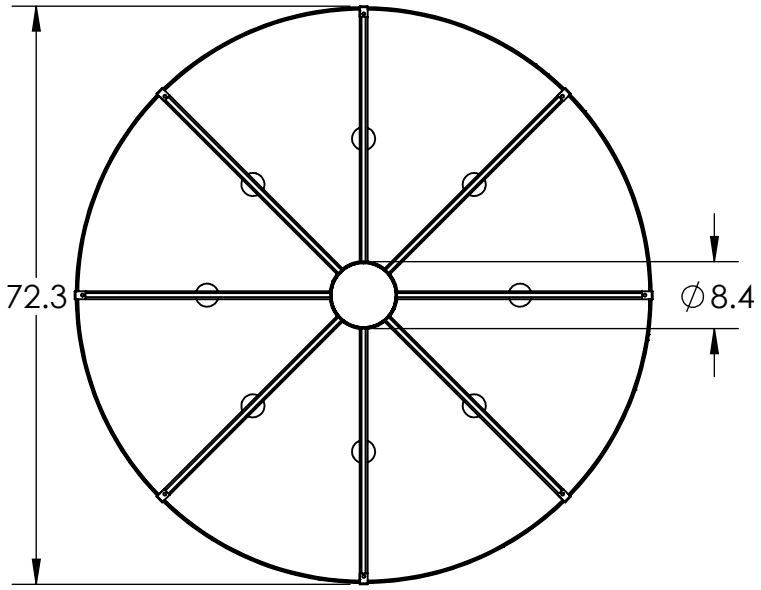

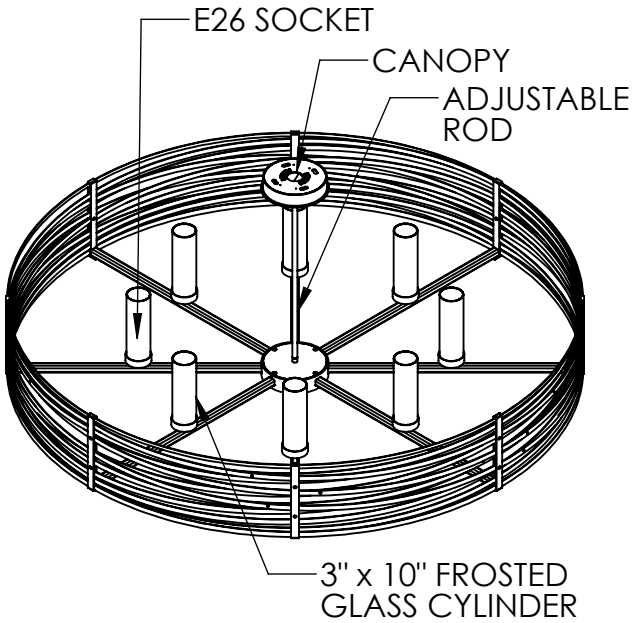

All dimensions are shown in inches unless otherwise stated.

Visit hammertonstudio.com for product options and specifications.

Bulbs Not Included

2/10/2020 ©

Mounting Packet: Z	Electrical Type: INCANDESCENT
Approximate lbs.: 120	Bulb Qty: 8 Bulb Type: T8
Finish: SEE WEB SITE FOR OPTIONS	Wattage: 60 Voltage: 120
Top Diffuser: OPEN	Socket Type: MEDIUM E26
Bottom Diffuser: OPEN	UL Location: DRY

All fixtures created by Hammerton are handcrafted by artisans. Dimensions may vary up to 7/8".

© Copyright 2019. All rights in design, detail or invention of this drawing are reserved as the property of Hammerton. Any imitation or adaptation without written consent is strictly prohibited.

Hammerton Inc. 217 Wright Brothers Dr. Salt Lake City, UT 84116 (801)973-8095

Canopy Mounting Detail

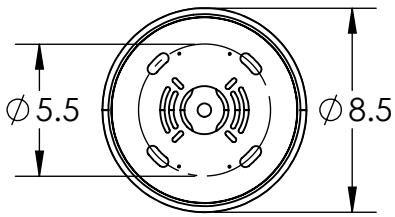

MOUNTS TO BUILDING STRUCTURE